SH. 1 OF 1	CAT NO 657Y	SIZE	DO NOT SEPARATE PRINT FROM WORK	LOT NO

OPER	TOOLS

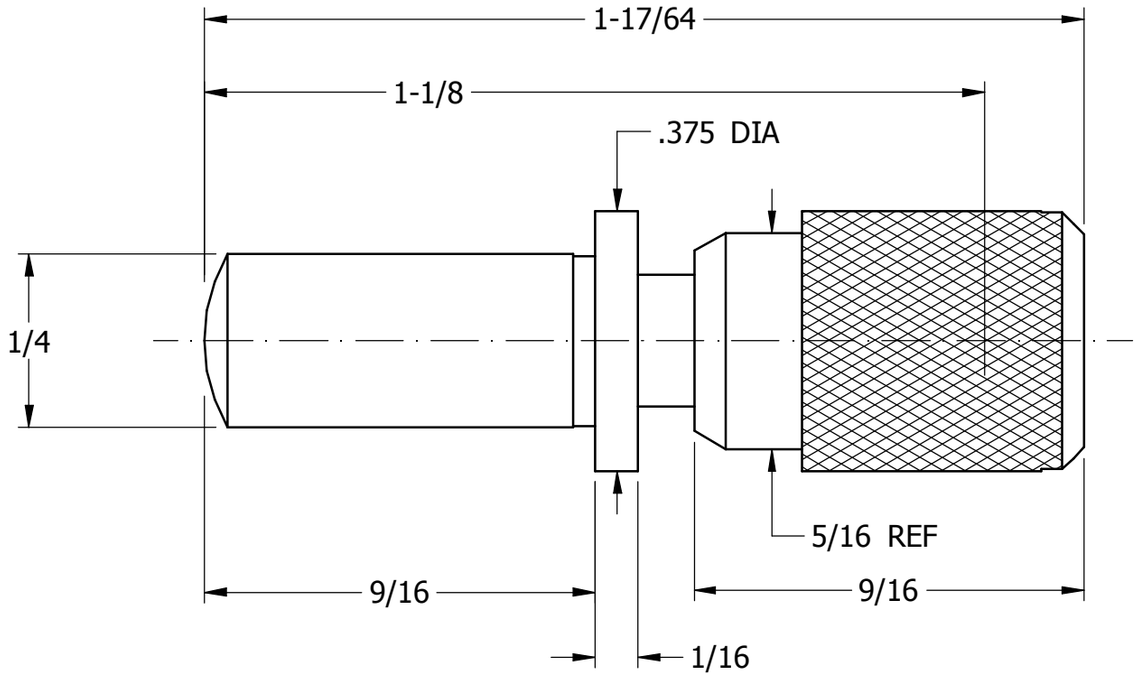

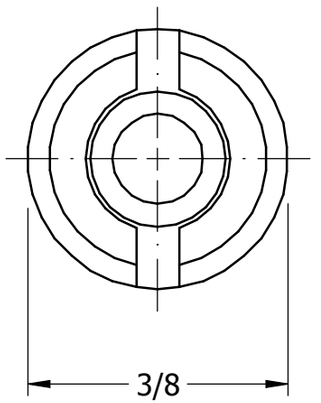

REV	DESCRIPTION	DATE	BY

DR KPH	CHK	DATE

SCREW & NUT
HOLDER FOR
MAGNETIC BASE

FRACTIONAL TOLERANCE +- 1/64 UNLESS OTHERWISE NOTED

THE L.S. STARRETT CO.
ATHOL, MASS.