Weitergabe sowie Vervielfältigung dieses Dokuments, Verwertung und Mitteilung seines Inhalts sind verboten, soweit nicht ausdrücklich gestattet. Zuwiderhandlungen verpflichten zu Schadenersatz. Alle Rechte für den Fall der Patent-, Gebrauchsmuster- oder Geschmacksmustereintragung vorbehalten.
*Schutzvermerk nach DIN ISO 16016 beachten! Technische Aenderungen vorbehalten!

Issued with CAD! Changes to be made only on the CAD/CAM model!

The reproduction, distribution and utilization of this document as well as the communication of its contents to others without explicit authorization is prohibited. Offenders will be held liable for payment of damages. All rights reserved in the event of the grant of a patent, utility model or design.
*Observe protective note according to DIN ISO 16016! Technical data is subject to change without notice!

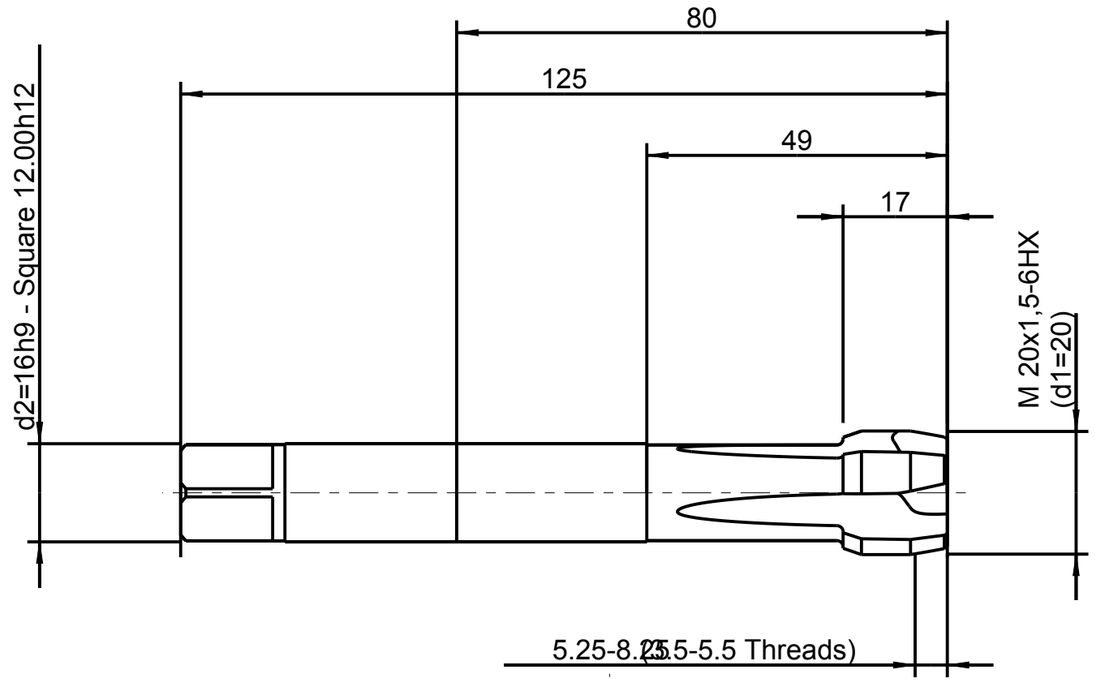

1:1

Identification

EMUGE-Z Rekord 2B-Z-GLT-1 M20x1,5-6HX
PM Kom.-Nr.

EMUGE FRANKEN

EMUGE-Werk Richard Glimpel
GmbH & Co. KG
www.emuge-franken.com

General tolerances ISO 2768-mk					
>	6	30	120	400	1000
≤	6	30	120	400	1000	2000
	±0,1	±0,2	±0,3	±0,5	±0,8	±1,2

Sheet	1/1
Scale	1:1
View	
Issued by	CAD/TF
Date of issue	18.05.2018
Replaced by	
Checked by	
Date	
Replacement for	
Document Type	Documentary drawing
Description	Rek.2B-Z-PM-GLT-1 M 20x1,5-6HX
Customer	
Component	-
Material no.	
Order no.	C020A601.0422
Customer drawing no.	
Drawing no.	C020A601.0422

A3